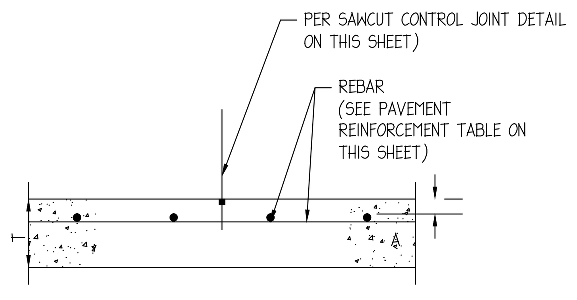

SAWCUT JOINT
N.T.S.

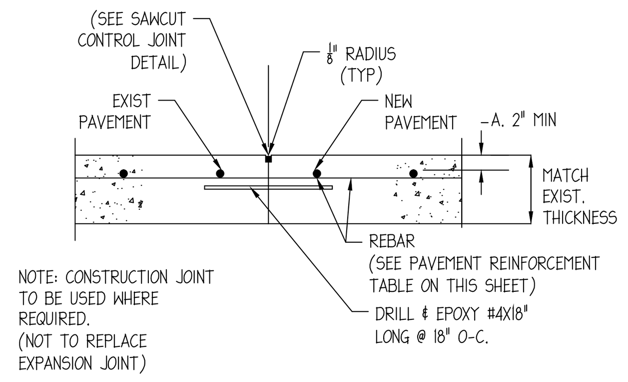

CONCRETE TO CONCRETE TIE IN
N.T.S.

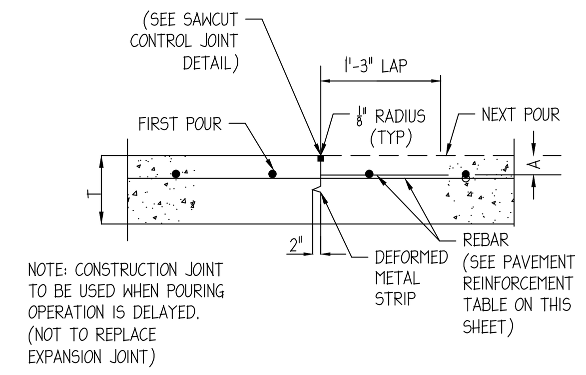

CONSTRUCTION JOINT
N.T.S.

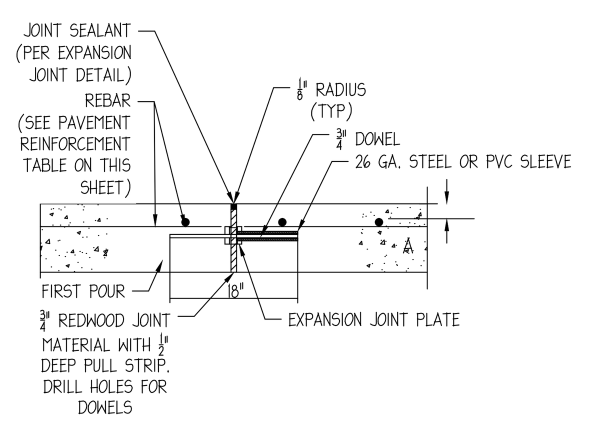

SAWCUT JOINT
N.T.S.

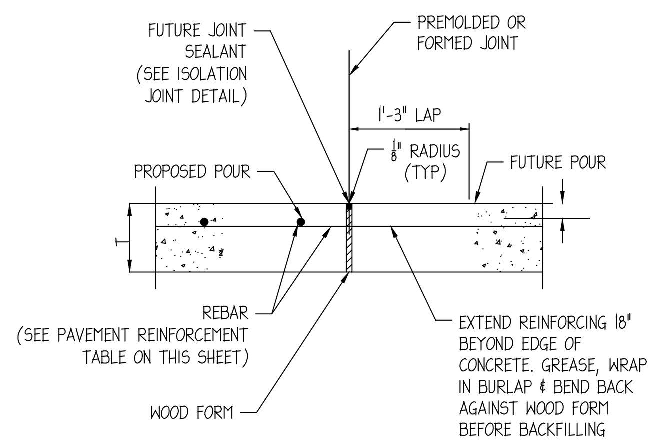

CONCRETE TO CONCRETE TIE IN
N.T.S.

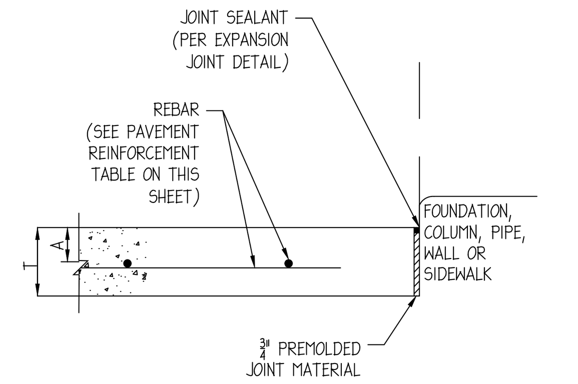

CONSTRUCTION JOINT
N.T.S.

NOTES:

1. REINFORCING STEEL BAR SIZE/SPACING SPECIFICATIONS IN GEOTECH REPORT SHALL SUPERSEDE ABOVE TABLE.
2. REINFORCING STEEL SIZE/SPACING IS BASED ON MIN. 60,000 PSI TENSILE STRENGTH REINFORCING STEEL AS SHOWN.
3. CONCRETE PAVING MIX DESIGN SHALL HAVE MINIMUM 4000 PSI COMPRESSIVE STRENGTH AT 28 DAYS. GEOTECHNICAL REPORT CONCRETE PAVING MIX DESIGN SHALL SUPERSEDE VALUES HEREIN.
4. MAXIMUM JOINT SPACING SHALL BE PER JOINT LAYOUT PLAN (IF PROVIDED) BUT SHALL NOT EXCEED VALUES IN TABLE.
5. MAXIMUM JOINT SPACING IN GEOTECHNICAL REPORT SHALL SUPERSEDE VALUES IN ABOVE TABLE.
6. USE STATE DOT SUBBASE UNLESS OTHERWISE SPECIFIED BY GEOTECHNICAL REPORT.
7. ALL JOINTS IN PAVING SHALL BE REFLECTED IN CURBING AND SHALL HAVE ALL THEIR RESPECTIVE JOINTING MATERIALS PRESENT (I.E. EXPANSION JOINTS SHALL HAVE THEIR RESPECTIVE FILLER BOARD AND CAULK REPLACED).
8. CURB EXPANSION JOINTS: - IF THERE IS AN EXPANSION JOINT IN THE PAVING, THE EXPANSION JOINT MUST FOLLOW THROUGH THE CURB. THE REINFORCING STEEL MUST ALSO BE CUT AT THE EXPANSION JOINT AND NOT ALLOWED TO RUN THROUGH THE JOINT CONTINUOUSLY. A SAW CUT EXPANSION JOINT IS NOT ACCEPTABLE BECAUSE NORMAL EXPANSION AND CONTRACTION WILL CAUSED THE CONCRETE TO PUSH AGAINST THE TWO SECTIONS AND ONE SIDE WILL EVENTUALLY FAIL. IF AN EXPANSION JOINT IS LEFT OUT AND MUST BE SAW CUT IN, THE CURB SHOULD BE CUT TWICE AND A 3/4" PIECE OF CONCRETE IS REMOVED. IN ALL CASES THE JOINT SHOULD BE CAULKED WITH NPI.
9. CONCRETE TOUCHING THE BACK OF CURBS:- ANY CONCRETE THAT TOUCHES THE BACK OF A CURB INCLUDING SIDEWALKS, ISLAND NOSINGS AND PAYPHONE PADS SHALL BE ISOLATED FROM THE CURB USING 1/2" BLACK ASPHALT IMPREGNATED FIBERBOARD. CONTRACTOR SHALL USE A REMOVABLE STRIP OR A ZIP-STRIP AND SEAL THE JOINT WITH SLI. THE ONLY EXCEPTION IS IF THE ISLAND NOSINGS ARE POURED MONOLITHICALLY WITH THE CURB AND PARKING LOT.
10. CURBS AT THE BUILDING FOUNDATION:- IF A CURB TOUCHES THE BUILDING FOUNDATION, IT NEEDS TO BE ISOLATED WITH EXPANSION JOINT MATERIAL JUST LIKE THE PAVING. IF AN EXPANSION JOINT IS LEFT OUT AND MUST BE SAW CUT IN, A 1/2" PIECE OF CONCRETE SHOULD BE REMOVED. THE JOINT SHOULD BE CAULKED WITH NPI.
11. EXPANSION JOINTS AT ISLAND NOSINGS:- IF THE ISLAND NOSINGS ARE POURED MONOLITHICALLY WITH THE CUB AND PARKING LOT, THEN PAVING EXPANSION JOINTS SHOULD CONTINUE THROUGH THE NOSINGS.

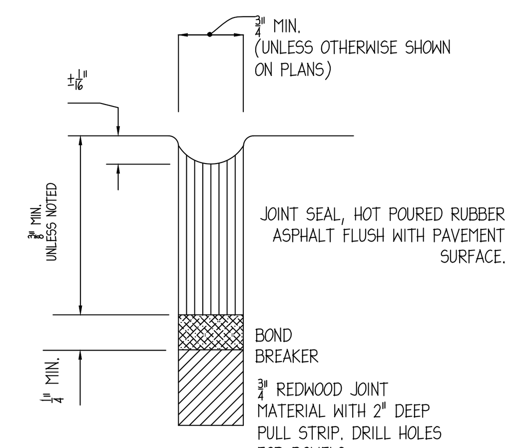

EXPANSION JOINT
N.T.S.

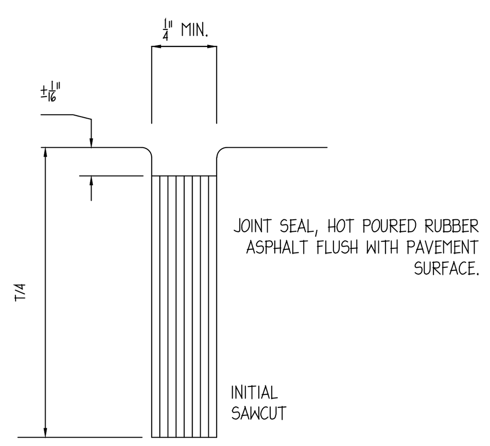

SAW CUT CONTROL JOINT
N.T.S.

REINFORCEMENT TABLE

CONCRETE SECTION DESIGNATION	(T) SLAB THICKNESS (IN.)	(COVER) COVER (IN.) (2" MIN)	MAX. EXPANSION JOINT SPACING (FT.)	60,000 PSI STEEL REINFORCING STEEL BAR SIZE & SPACING#
TYPE "A"	6	2	15	#3 @ 24" C-C
TYPE "B"	8	2	15	#3 @ 24" C-C
TYPE "C"	12	2	15	#3 @ 24" C-C

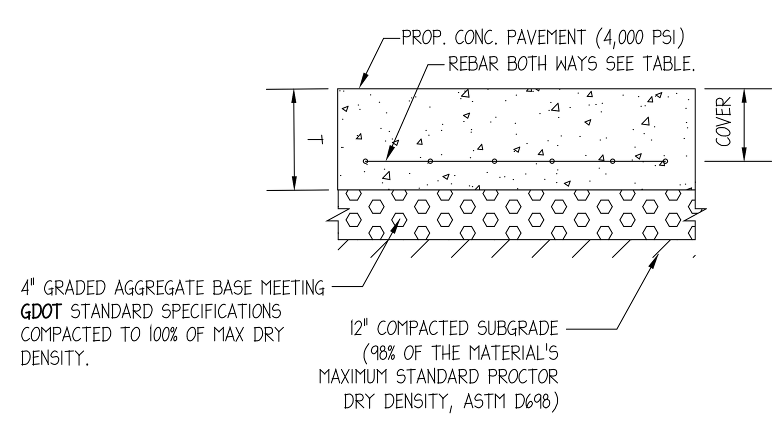

1 CONCRETE SECTION NTS

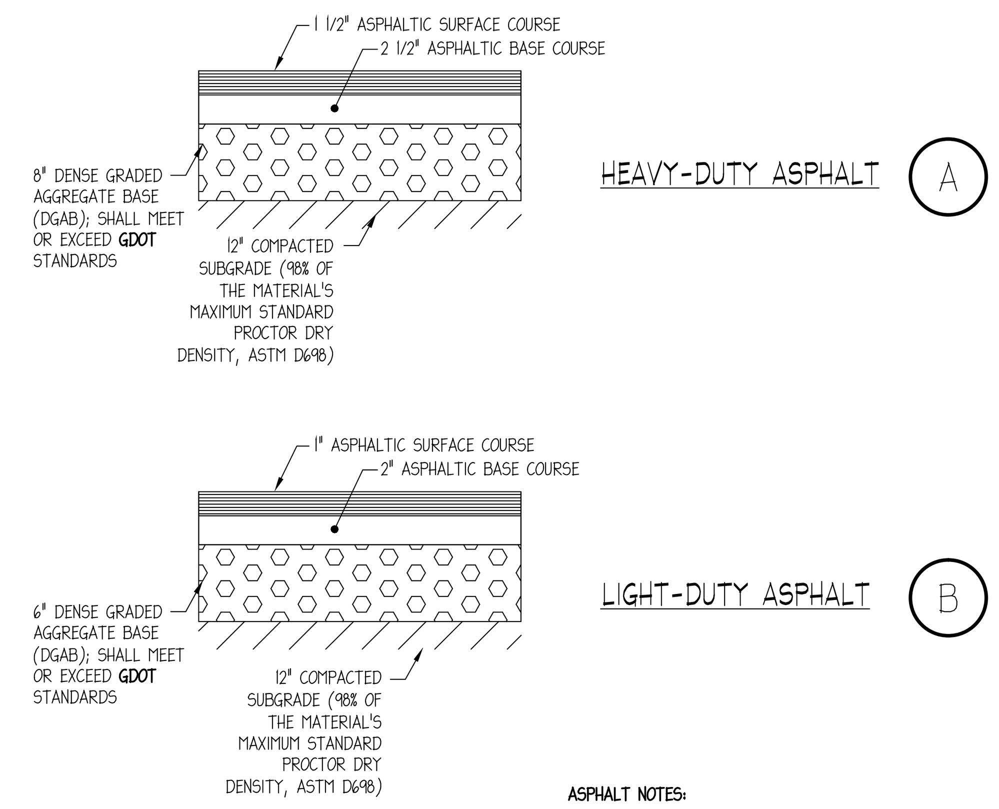

ASPHALT NOTES:

- THE ASPHALT SURFACE COURSE SHOULD CONFORM TO THE MOST RECENT EDITION OF THE **GEORGIA** DEPARTMENT OF TRANSPORTATION (**GDOT**) STANDARD SPECIFICATION FOR ROAD AND BRIDGE CONSTRUCTION, FOR HOT MIX ASPHALTIC CONCRETE SURFACE COURSE.
- THE BASE COURSE SHOULD CONFORM TO THE **GDOT** STANDARDS FOR BASE COURSE COMPACTED TO 100 PERCENT OF THE MODIFIED PROCTOR (ASTM D-1557) MAXIMUM DRY DENSITY.
- TACK COAT SHOULD BE PROVIDED ATOP EACH PAVEMENT SECTION.

2 PAVEMENT SECTION NTS

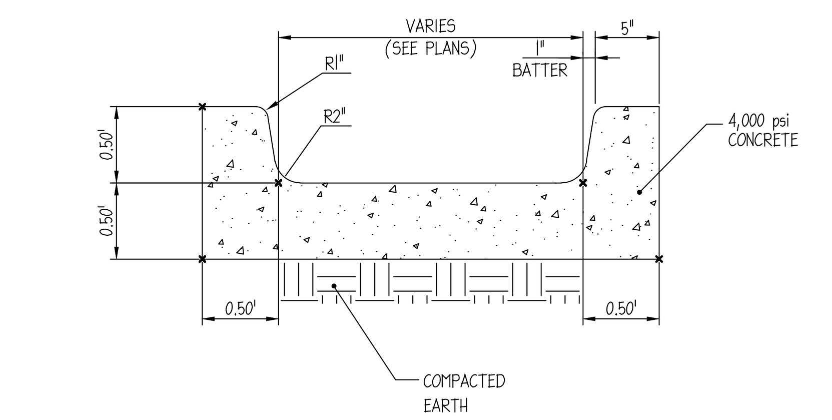

SLOPE FLUME ACCORDING TO GRADING AND DRAINAGE PLAN

CONCRETE NOTES:

- f'c = 4,000 PSI
- PROVIDE CONTROL JOINTS AT 5' O.C.
- PROVIDE EXPANSION JOINTS ONLY WHERE CONCRETE PAVEMENT ABUTS FIXED OBJECTS, CURB AND GUTTER, AND OTHER PAVEMENT TYPES.
- 6"X6" WWM MAY BE SUBSTITUTED WITH EQUILEVENT STRENGTH FIBER MESH.

3 CONCRETE FLUME NTS

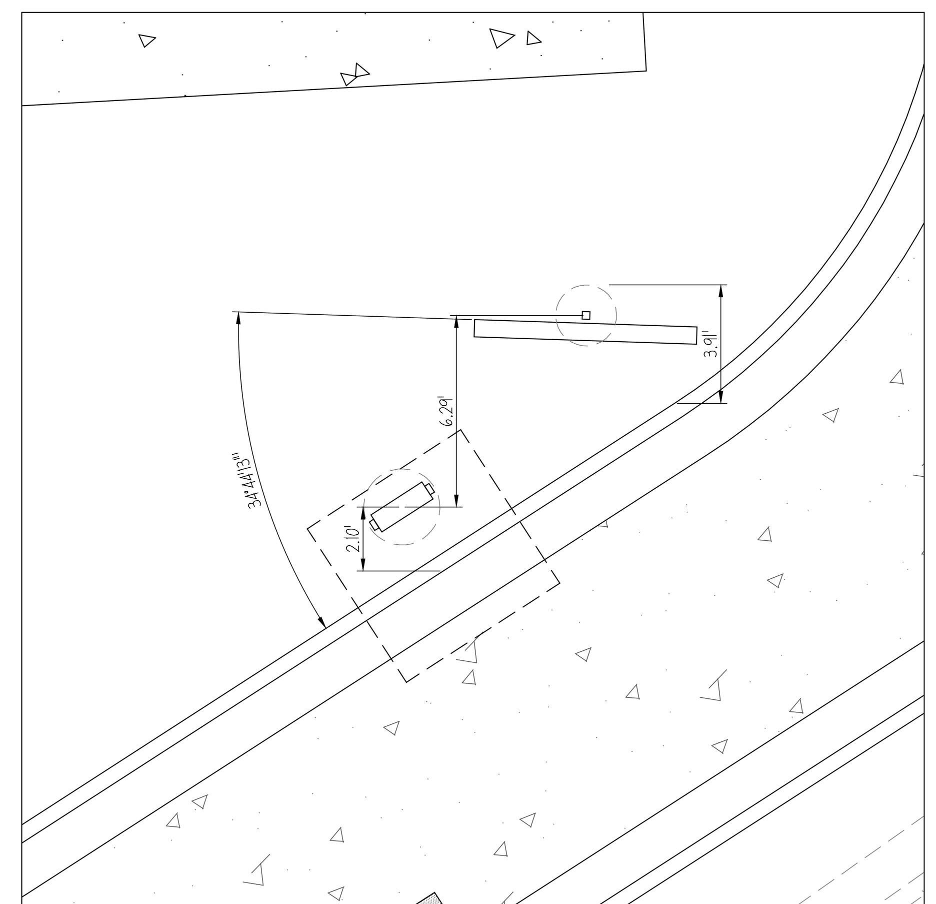

MENUE BOARD AND ORDER CANOPY STAKING

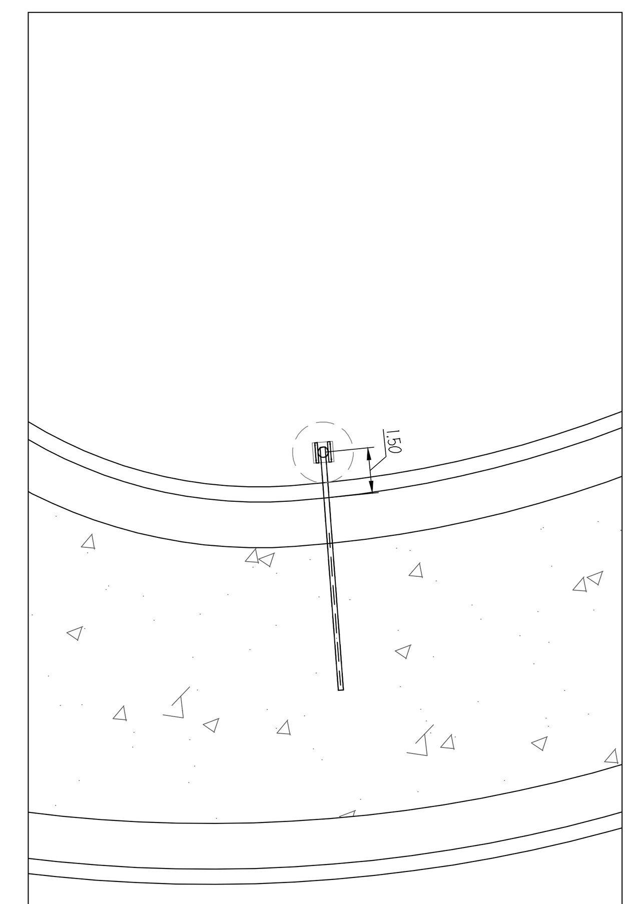

CLEARANCE BAR STAKING

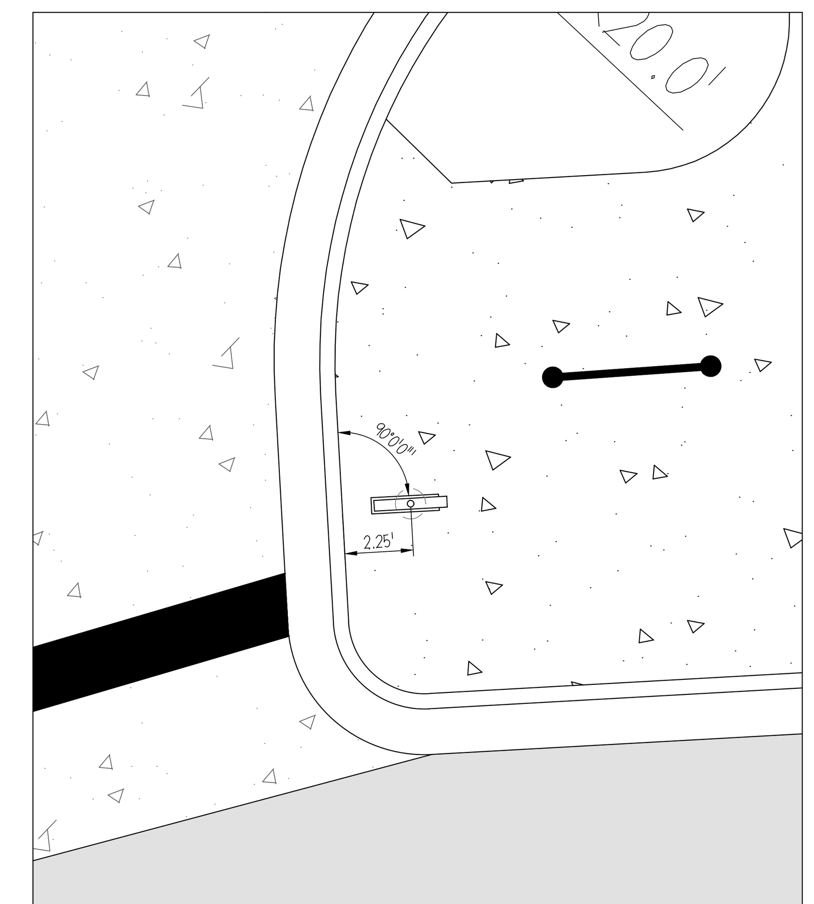

THANK YOU SIGN STAKING

4 DRIVE-THRU ELEMENTS NTS

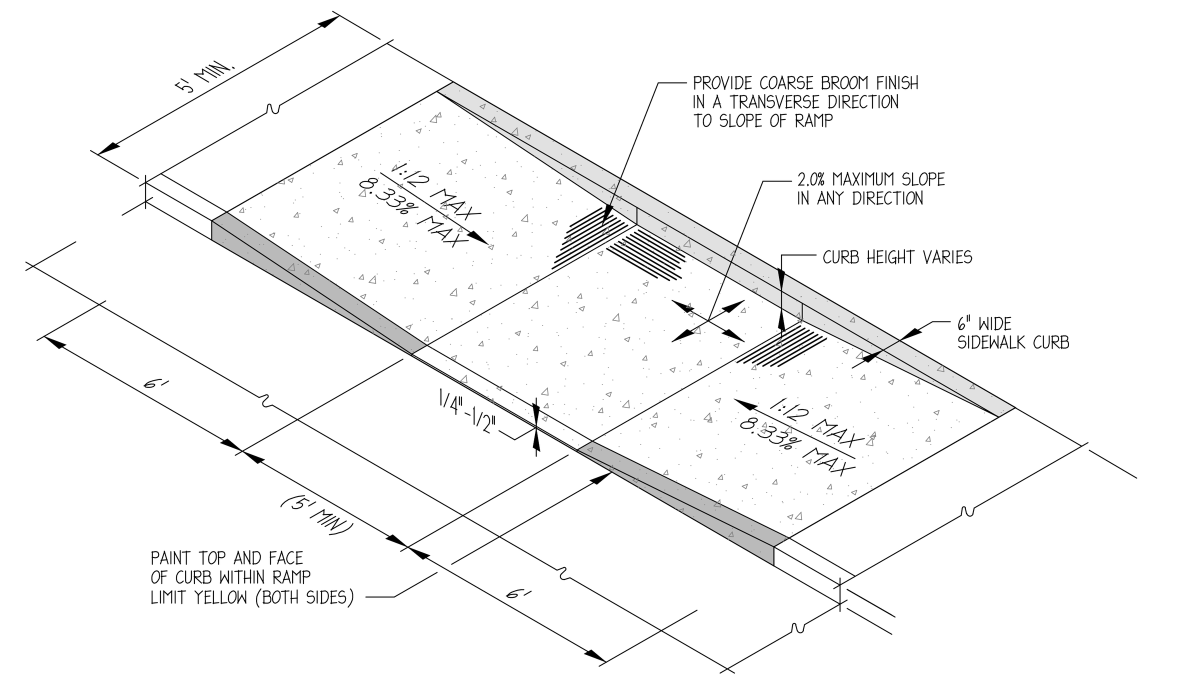

5 DEPRESSED RAMP NTS

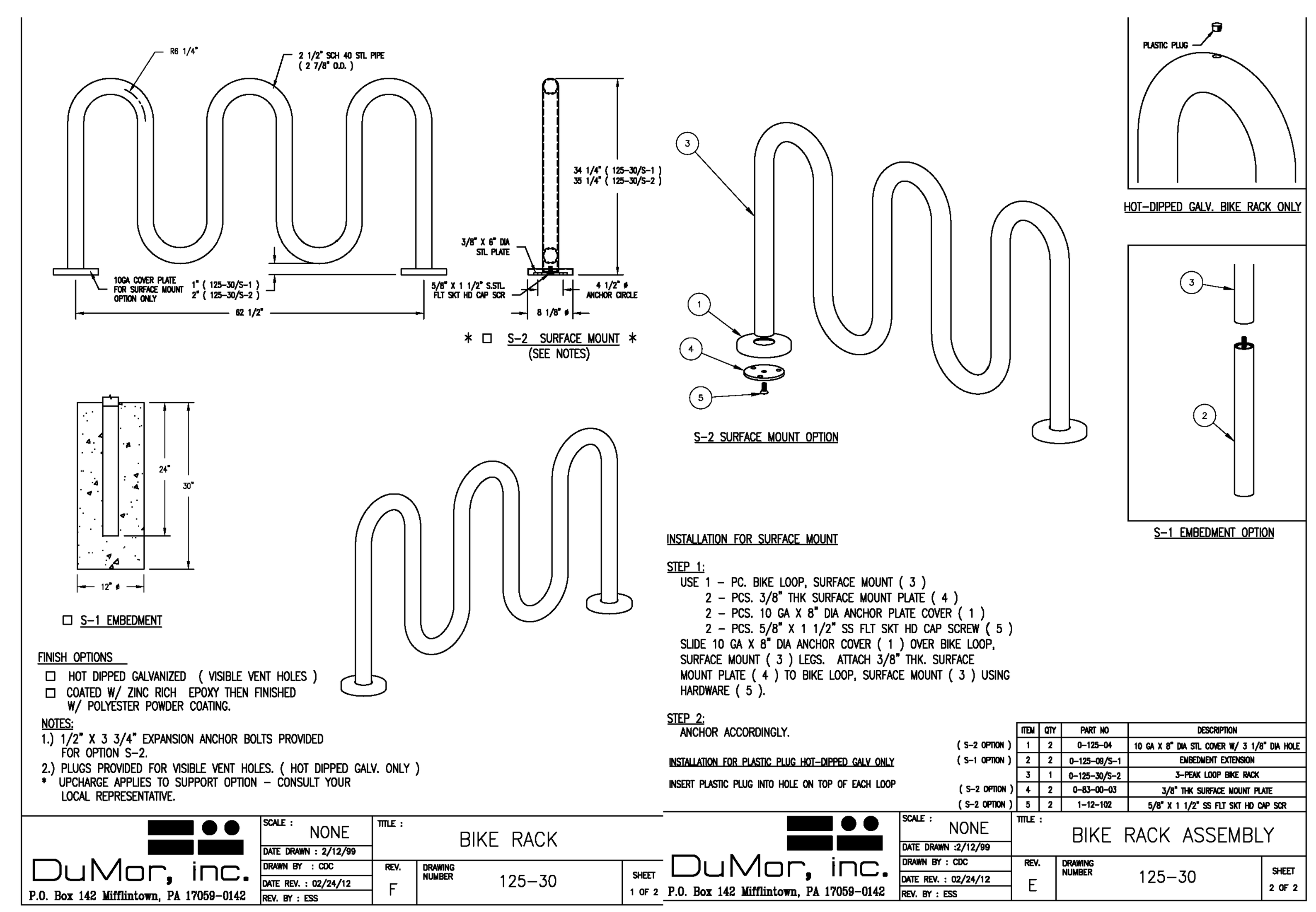

6 BIKE RACK NTS

ingenium ENTERPRISES
PLANNING & ENGINEERING
221 ROSWELL ST.
SUITE 100
ALPHARETTA, GA 30009
770.437.8850
WWW.INGENIUMTEAM.COM

GEORGIA REGISTERED No. 038772 PROFESSIONAL ENGINEER 2/22/17 ERIK ALEXANDER HOUSTON

PANDA EXPRESS
3276 LAWRENCEVILLE-SUWANEE RD.
SUWANEE, GEORGIA

D5253

PLANS FOR:

CLIENT:
PANDA RESTAURANT GROUP, INC.
1683 WALNUT GROVE AVE
ROSEMEAD, CA 91770
PHONE: (626) 372-8119

REVISION HISTORY

--/--/----	--/--/----
--/--/----	--/--/----
--/--/----	--/--/----
--/--/----	--/--/----
--/--/----	--/--/----
--/--/----	--/--/----
--/--/----	--/--/----

THE CIVIL ENGINEER REGULARLY UPDATES ELECTRONIC FILES DURING THE DEVELOPMENT OF A PROJECT. AS A RESULT, THE DATA INCLUDED IN ANY CAD FILE OR DRAWING PRIOR TO ITS FINAL RELEASE DOES NOT NECESSARILY REFLECT THE COMPLETE SCOPE OR CONTENT AS DEFINED IN THE CONTRACT. THE CONTENTS IN THESE FILES MAY THEREFORE BE PRELIMINARY, INCOMPLETE WORK IN PROGRESS, AND SUBJECT TO CHANGE. FURTHERMORE, THE INFORMATION CONTAINED HEREIN IS THE EXCLUSIVE PROPERTY OF THE CIVIL ENGINEER. THE ORIGINAL IDEAS REPRESENTED HERE BY THIS INFORMATION SHALL NOT BE USED, ALTERED, OR REPRODUCED IN ANY MANNER WITHOUT THE EXPRESSED WRITTEN CONSENT OF THE CIVIL ENGINEER. THESE PLANS ARE SUBJECT TO FEDERAL COPYRIGHT LAWS; ANY USE OF SAME WITHOUT EXPRESSED WRITTEN PERMISSION OF THE CIVIL ENGINEER IS PROHIBITED.

PROJ #	160251
DWG NAME	160251 C03.DWG
ISSUE DATE	02/22/2017
PROJ MGR	BF

HARDSCAPE DETAILS II

C03.4
SHEET NUMBER

ISSUE FOR PERMITTING/BID